Table 4–28 Brake specifications

Motor Model	Holding Torque (N·m)	Supply Voltage (VDC) ±10%	Coil Resistance (Ω)±7%	Exciting Current (A)	Release Time (ms)	Apply Time (ms)	Backlash (°)
MS1H1-05B/10B MS1H4-10B	0.32	24	94.4	0.25	⩽ 20	⩽ 40	⩽ 1.5
MS1H1-20B/40B MS1H4-20B/40B	1.5		75.79	0.32	⩽ 20	⩽ 60	⩽ 1.5
MS1H1-75B/10C MS1H4-75B/10C	3.2		57.6	0.42	⩽ 40	⩽ 60	⩽ 1
MS1H2-10C/15C/ 20C/25C	8		32.73	0.73	⩽ 40	⩽ 100	⩽ 1
MS1H2-30C/40C/ 50C MS1H3-85B/13C/ 18C	16		24	1	⩽ 60	⩽ 120	⩽ 1
MS1H3-29C/44C/ 55C/75C	50		18.58	1.29	⩽ 100	⩽ 200	⩽ 1

Note

- The brake cannot share the same power supply with other electrical devices. This is to prevent malfunction of the brake due to voltage or current drop caused by other working devices.
- Use cables with a cross-sectional area above 0.5 mm^2.

4.4 Encoder Terminal CN2

4.4.1 Terminal Layout

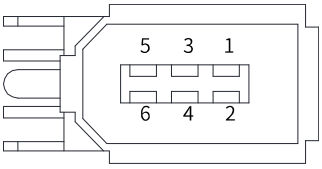

Encoder signal terminal CN2

Figure 4-35 Encoder terminal pin layout

Table 4–29 Description of encoder terminal pins

No.	Name	Description
1	+5 V	5 V power supply
2	0 V	-
3	Reserved	-
4	Reserved	-
5	PS+	Encoder signal
6	PS-	
Enclosure	PE	Shield

4.4.2 Connecting the Absolute Encoder

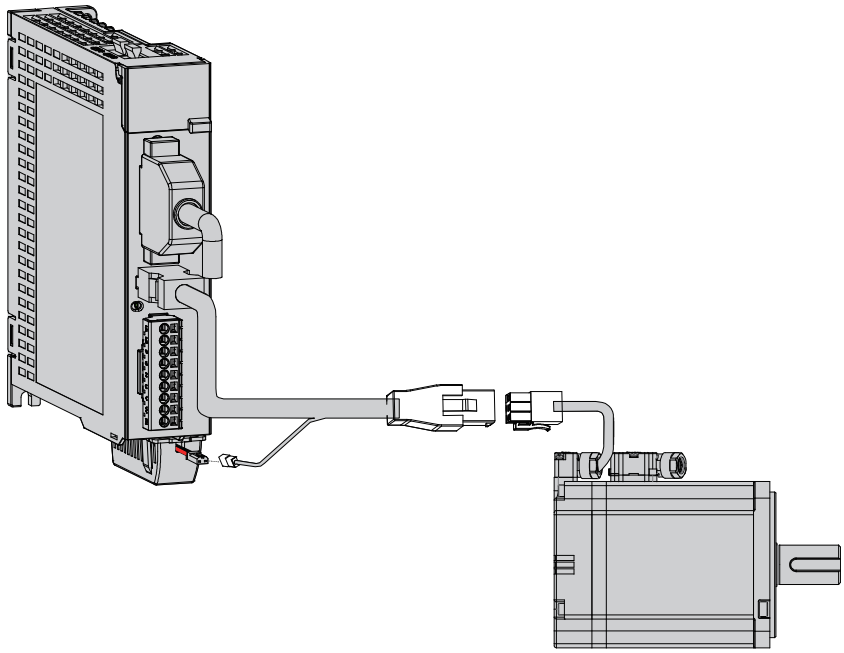

Figure 4-36 Signal wiring example of the absolute encoder[1]

Note

- [1]: The figure shows encoder cable wiring.
- The encoder cable color is subject to the color of the actual product. Cable colors mentioned in this guide all refer to Inovance cables.

The following figure describes the lead wire color of the battery box.

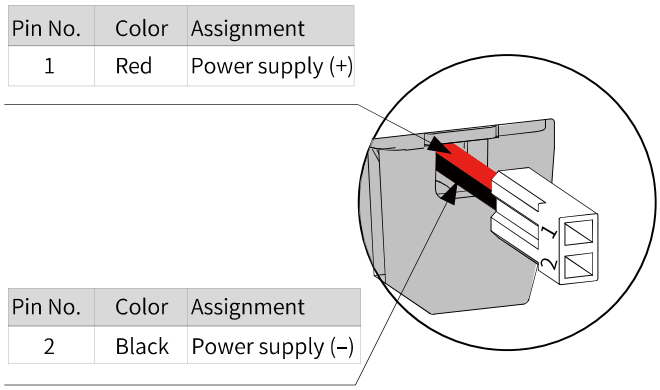

Figure 4-37 Lead wire color of the battery box

Note

- Store the battery in environment with ambient temperature within the specified range and ensure the battery in the good contact and carries sufficient power. Failure to comply may result in encoder position information loss.
- Battery box (battery included) model : S6-C4A

Table 4–30 Terminal-type motor encoder cable connector

Motor Frame Size[1]	Illustration		Pin			
			Pin No.	Signal Name	Color	Type
Terminal-type: 40 60 80	Servo drive side	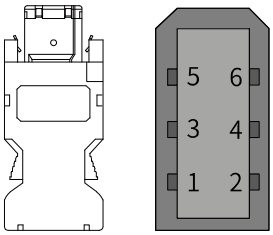 6-pin male (right side as the connecting side)	1	+5V	Red	Twisted pair
			2	GND	Orange	
			5	PS+	Blue	Twisted pair
			6	PS-	Purple	
			Enclosure	PE	-	-
	Motor side	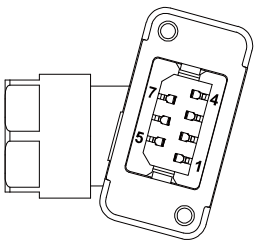 7-pin connector	1	PS+	Blue	Twisted pair
			2	PS-	Purple	
			3	DC+	Brown	Twisted pair
			4	DC-	Black	
			5	+5V	Red	Twisted pair
			6	GND	Orange	
			7	PE	-	-

Note

[1] The flange size refers to the width of the mounting flange.

Table 4–31 Flying leads type motor encoder cable connector (9-pin)

Motor Frame Size[1]	Illustration			Pin			
				Pin No.	Signal Name	Color	Type
Flying leads type: 40 60 80	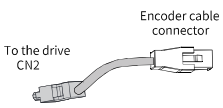	Servo drive side	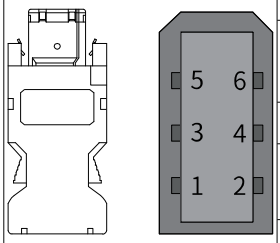 6-pin male (right side as the connecting side)	1	+5V	Red	Twisted pair
				2	GND	Orange	
				5	PS+	Blue	Twisted pair
				6	PS-	Purple	
				Enclosure	PE	-	-
		Motor side	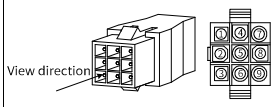 9-pin connector Recommended: Plastic enclosure: AMP 172161-1; terminal: AMP 770835-1	1	Battery (+)	Brown	Twisted pair
				4	Battery (-)	Black	
				3	PS+	Blue	
				6	PS-	Purple	
				9	+5V	Red	-
				8	GND	Orange	
				7	Shield	-	

Note

[1] The flange size refers to the width of the mounting flange.

Table 4–32 Absolute encoder cable connector (MIL-DTL-5015 series 3108E20-29S aviation connector)

Motor Frame Size[1]	Illustration			Pin			
				Pin No.	Signal Name	Color	Type
100 130 180	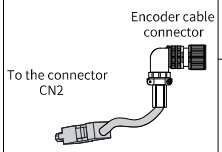	Servo drive side	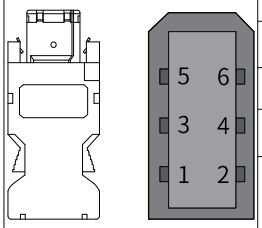 6-pin male (right side as the connecting side)	1	+5V	Red	Twisted pair
				2	GND	Orange	
				5	PS+	Blue	Twisted pair
				6	PS-	Purple	
				Enclosure	PE	-	-
		Motor side	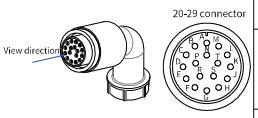	A	PS+	Blue	Twisted pair
				B	PS-	Purple	
				E	Battery (+)	Brown	-
				F	Battery (-)	Black	
				G	+5V	Red	-
				H	GND	Orange	
				J	Shield	-	

Note

[1] The flange size refers to the width of the mounting flange (in mm).

4.4.3 Installing Absolute Encoder Battery Box

The optional S6-C4A battery box contains the following items:

- One plastic case.
- One battery (3.6 V, 2,600 mAh).
- Terminal block and crimping terminal.